Franke Triflow

Valve Change Guide - Tradition

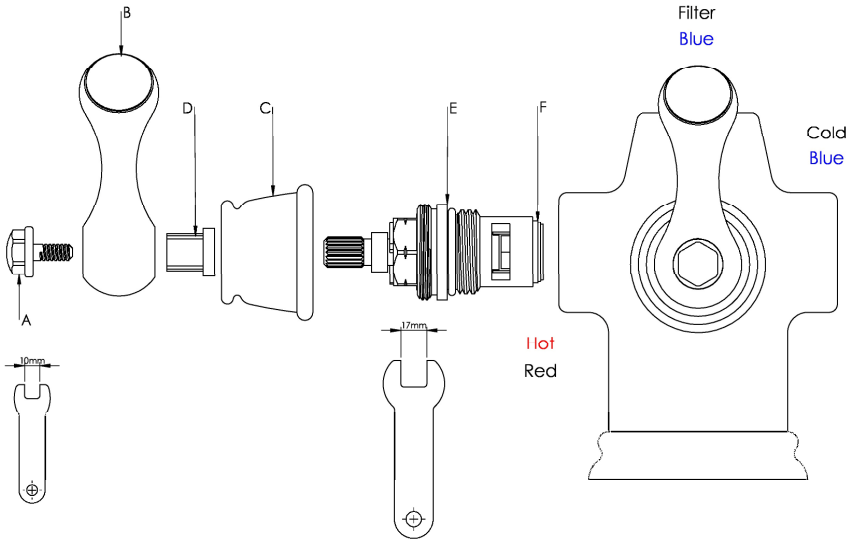

Before you begin
Replacing the valves of a Tradition tap is a straightforward procedure for any competent handyperson. However, should you have any doubts about your ability to tackle the task we suggest you engage a suitably qualified professional.

The tools you will need
1. 10mm ring spanner or a small adjustable spanner
2. 17mm ring spanner or a medium size adjustable spanner.

The valve change procedure

1. Turn off the water supply to the tap.

2. Carefully unscrew and remove the hexagon screw (A) that secures the handle, using a 10mm spanner or a suitable adjustable one.

3. Pull off the complete lever handle (B) .

4. Unscrew and remove the shroud (C)

5. Remove the plastic Vernier Insert (D). It will either remain on the end of the old valve or stay inside the handle (a new vernier insert is supplied with each new valve).

6. Unscrew the old valve (E) using a 17 mm spanner or a suitable adjustable one. Bear in mind that it might take some initial force to free the valve if it has been in place for some time.

7. Select the correct valve, as they are handed. The valves are identifiable by the colour of the silicon insert (F) - you should have one red one and two blue. Viewing the tap from the front (refer to the diagram above). The **red** valve should be installed on the left (hot) side. A **blue** valve should be installed on the right (cold) side. A **blue** valve should be installed in the centre (filtered water) position.

8. Screw each valve in its correct location, as described above, and tighten firmly.

9. Check the spindle of each valve is in the closed position and position the new vernier insert on the splined end of the valve spindle. Align the handle as close to vertical as you can manage. If the handle is not exactly vertical, slide off the handle, remove the vernier insert and re-position it by rotating it one or two notches then refit the handle. Repeat this procedure until you are satisfied with the handle alignment.

10. Carefully slide off the handle to leave the vernier insert in place on the valve then refit the shroud and screw it hand tight. Refit the lever retaining nut and tighten it carefully to secure the lever. Do not over-tighten it as you will risk shearing the thread.

11. Turn the water supply back on and check for leaks.

FRANKE
FRANKE FILTERFLOW

KITCHEN
SYSTEMS

Franke FilterFlow 3 Old Winery Business Park, Chapel Street,
Cawston, Norfolk, NR10 4FE
Phone +44 (0) 808 165 0008 Fax +44 (0) 844 358 0166
Email: info@frankefilterflow.co.uk