PERRIN & ROWE
MAYFAIR LONDON

Specification **4193**

Ionian Two Hole Sink Mixer with Porcelain Lever Handles

- 1/4 turn ceramic disc flow control.
- vernier insert for accurate handle alignment.
- unique handle construction with integral bearing ring.
- Biflow
- Corian handles

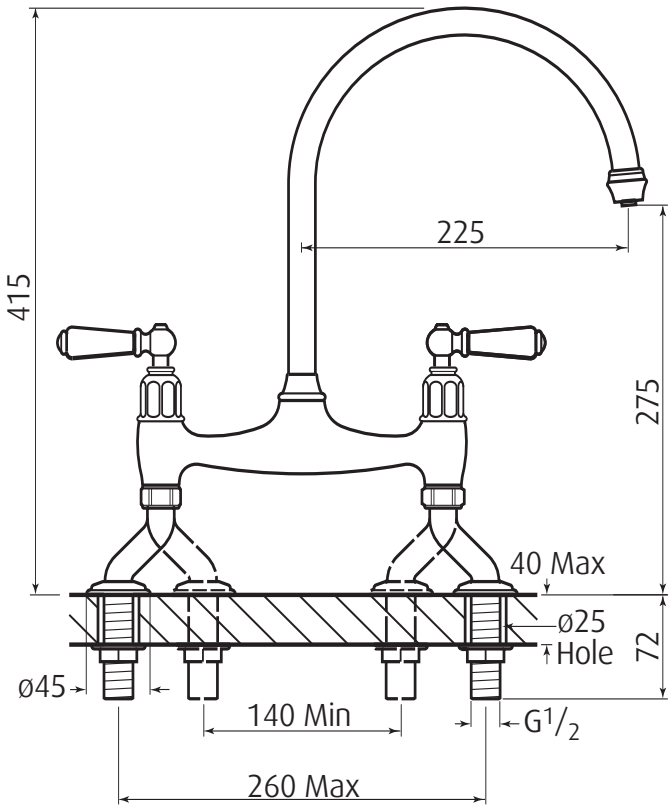

Temp Range:

min 1°C/34°F
max 85°C/185°F

Recommended working pressure:

min 0.2 bar/3psi
max 5 bar/75psi

WRAS APPROVED PRODUCT

Perrin & Rowe is a registered trademark of Avilion Limited.
Gateway XIII, Ferry Lane, Rainham, Essex, RM13 9JY, United Kingdom.
T +44(0)1708 526361 F +44(0)1708 550220 E sales@avilion.co.uk W www.avilion.co.uk

Avilion
A FLOW OF GOOD IDEAS

PERRIN & ROWE
MAYFAIR LONDON

Specification **4193**

Ionian Two Hole Sink Mixer with Porcelain Lever Handles

- 1/4 turn ceramic disc flow control.
- vernier insert for accurate handle alignment.
- unique handle construction with integral bearing ring.
- Biflow
- Corian handles

Where * Indicated Specify Colour.

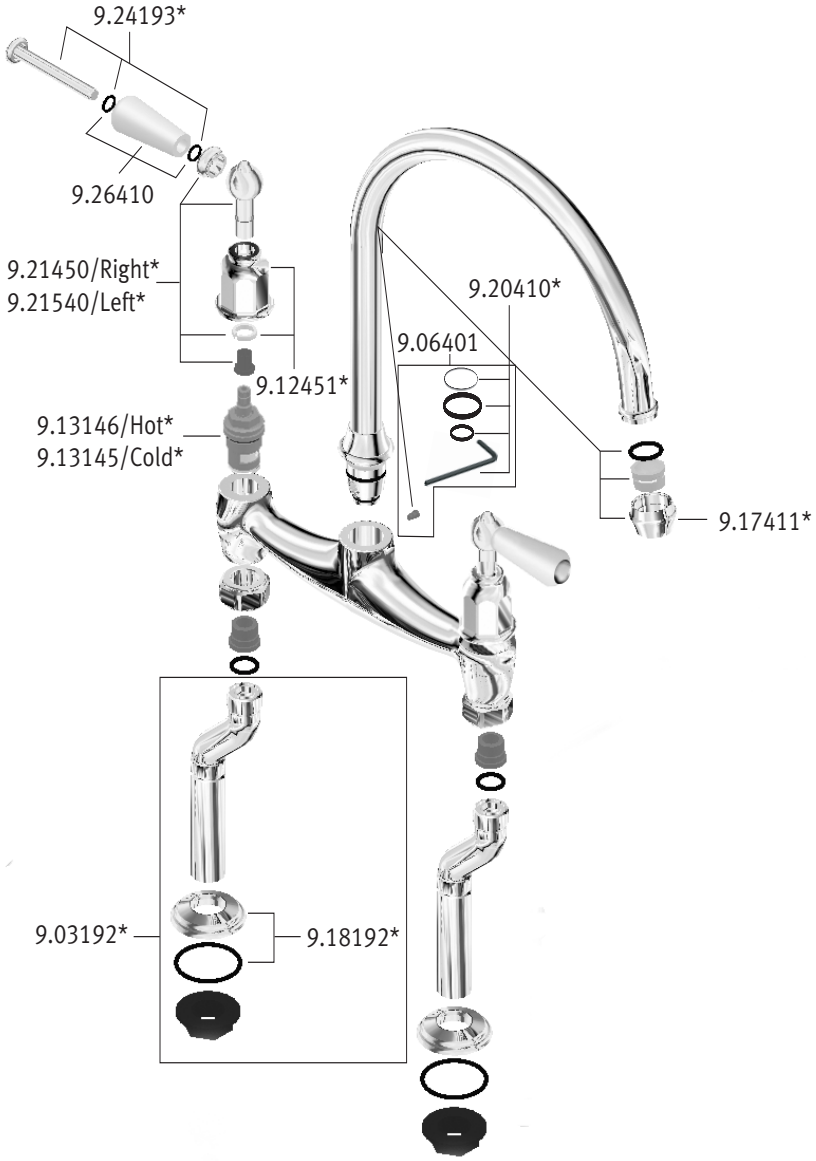

Perrin & Rowe is a registered trademark of Avilion Limited.
Gateway XIII, Ferry Lane, Rainham, Essex, RM13 9JY, United Kingdom.
T +44(0)1708 526361 **F** +44(0)1708 550220 **E** sales@avilion.co.uk **W** www.avilion.co.uk

Avilion
A FLOW OF GOOD IDEAS